Greens
Freestanding Bath Spout

2511500CP | Chrome
2511500MB | PVD Matte Black
2511500BN | PVD Brushed Nickel
2511500BB | PVD Brushed Brass
2511500GM | PVD Gunmetal
2511500BR | PVD Brushed Bronze
2511500BC | PVD Brushed Copper

Fixed Spout

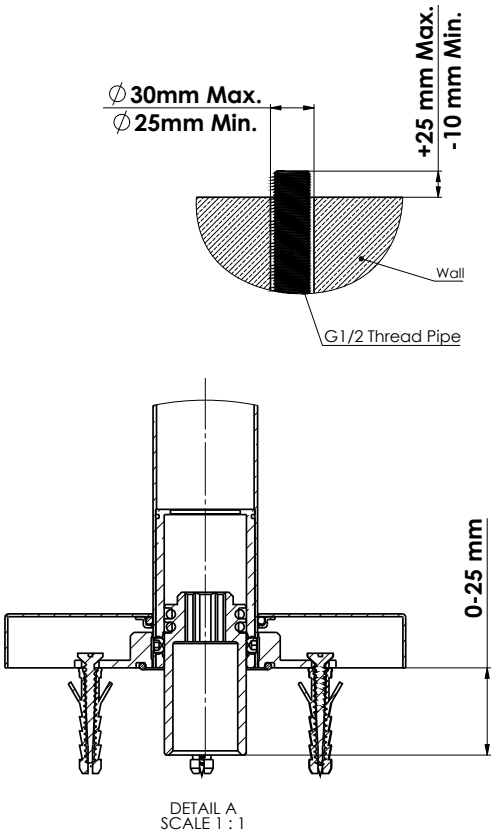

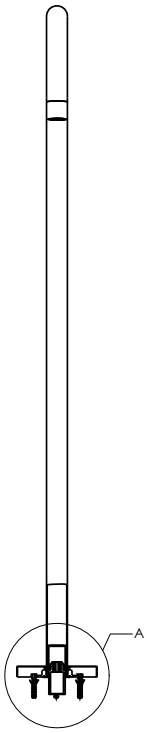

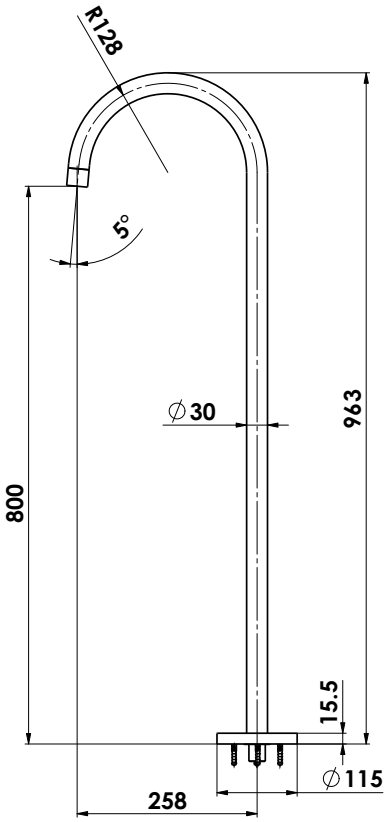

NZ PHONE 0800 655 455
EMAIL nzsales@greenstapware.com
WEBSITE www.greenstapware.com

GREENS
where life meets water