Lavish Brass
Rail Shower

239100CP | Chrome
239100BN | Brushed Nickel
239100BB | Brushed Brass
239100MB | Matte Black
239100BC | Brushed Copper
239100GM | Gun Metal

WELS 3 Star 9.0L/M
22MM Round Brass Rail
120mm High Flow Brass Handset
Rail Adjustable to 800mm Centres
Double Sided Cone Hose Attachments

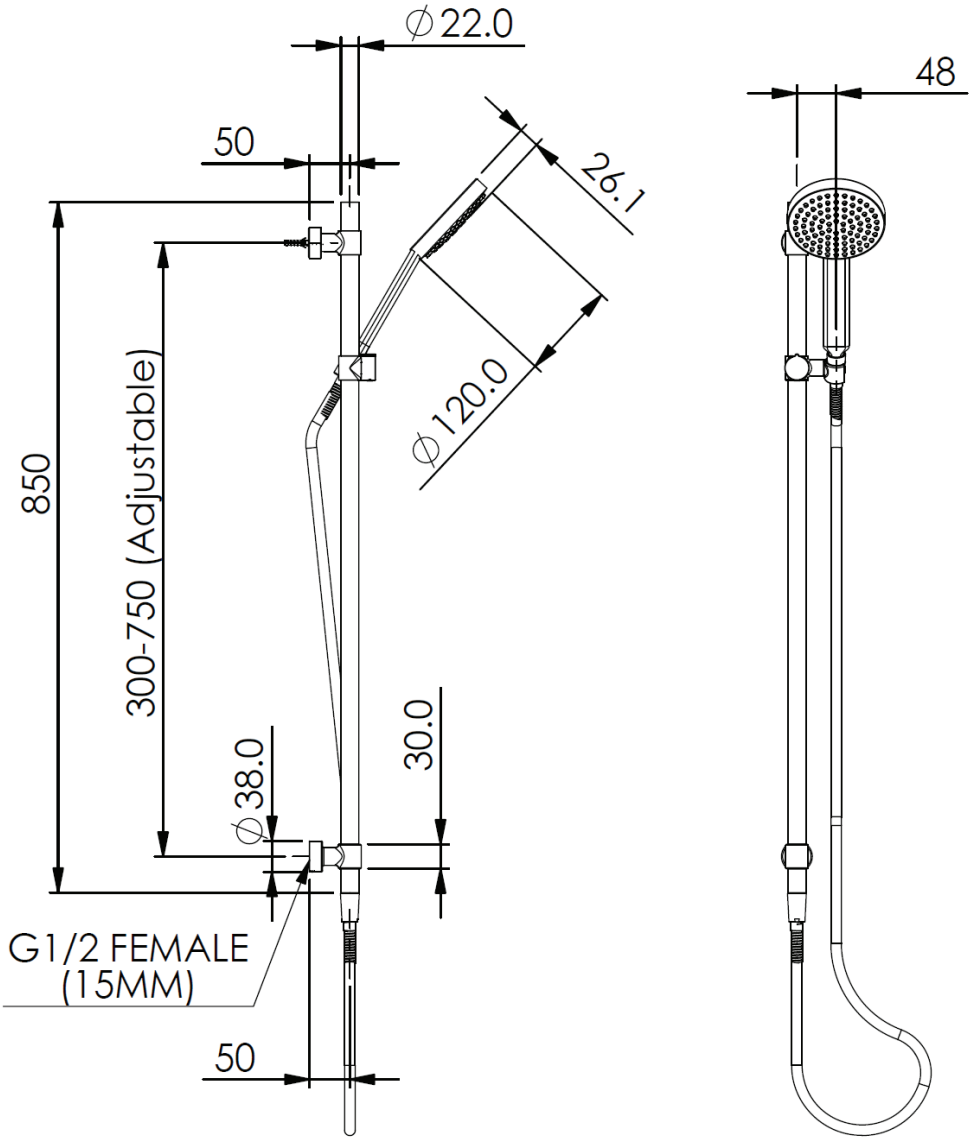

AU PHONE - 1800 244 487
EMAIL - aussales@greenstapware.com
WEBSITE - greenstapware.com.au

GREENS
where life meets water